LED RECESSED GIMBAL LUMINAIRE 3”

G-19845

G-19846

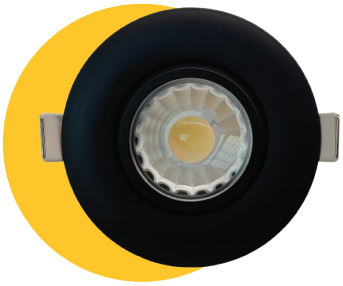

G-19847

G-19848

G-19849

Pack:18

ITEM	G-19845	G-19846	G-19847	G-19848	G-19849
DESCRIPTION	R3/8W/GR/LED/5CCT	R3/8W/GR/LED/B/5CCT	R3/8W/GR/LED/BN/5CCT	R3/8W/GR/LED/BZ/5CCT	R3/8W/GR/LED/BB/5CCT
COLOR TEMP	27, 30, 35, 41, 50k	27, 30, 35, 41, 50k	27, 30, 35, 41, 50k	27, 30, 35, 41, 50k	27, 30, 35, 41, 50k
OUTPUT LUMEN	700	650	650	650	700
TRIM FINISH	WHITE	BLACK	BRUSHED NICKEL	BRONZE	BRUSHED BRASS
INPUT VOLTS	120-277V	120V	120V	120V	120V
WATTAGE	8W	8W	8W	8W	8W
EQUIV WATTAGE	65W	65W	65W	65W	65W
CRI	>90	>90	>90	>90	>90
CUTOUT	2.75	2.75	2.75	2.75	2.75
OD	3.36	3.36	3.36	3.36	3.36
HEIGHT	2.15	2.15	2.15	2.15	2.15
OUTPUT VOLTS	33-38v	33-38v	33-38v	33-38v	33-38v
mA	170mA	170mA	170mA	170mA	170mA

Dimmable: **5%**

Lifetime: **50,000** hours

Warranty: **3** years

SELECTABLE COLOR TEMPERATURE

CRI 90+ TRUE COLORS

IC RATED

WET LOCATION

AIR TIGHT

BEAM ANGLE 40°

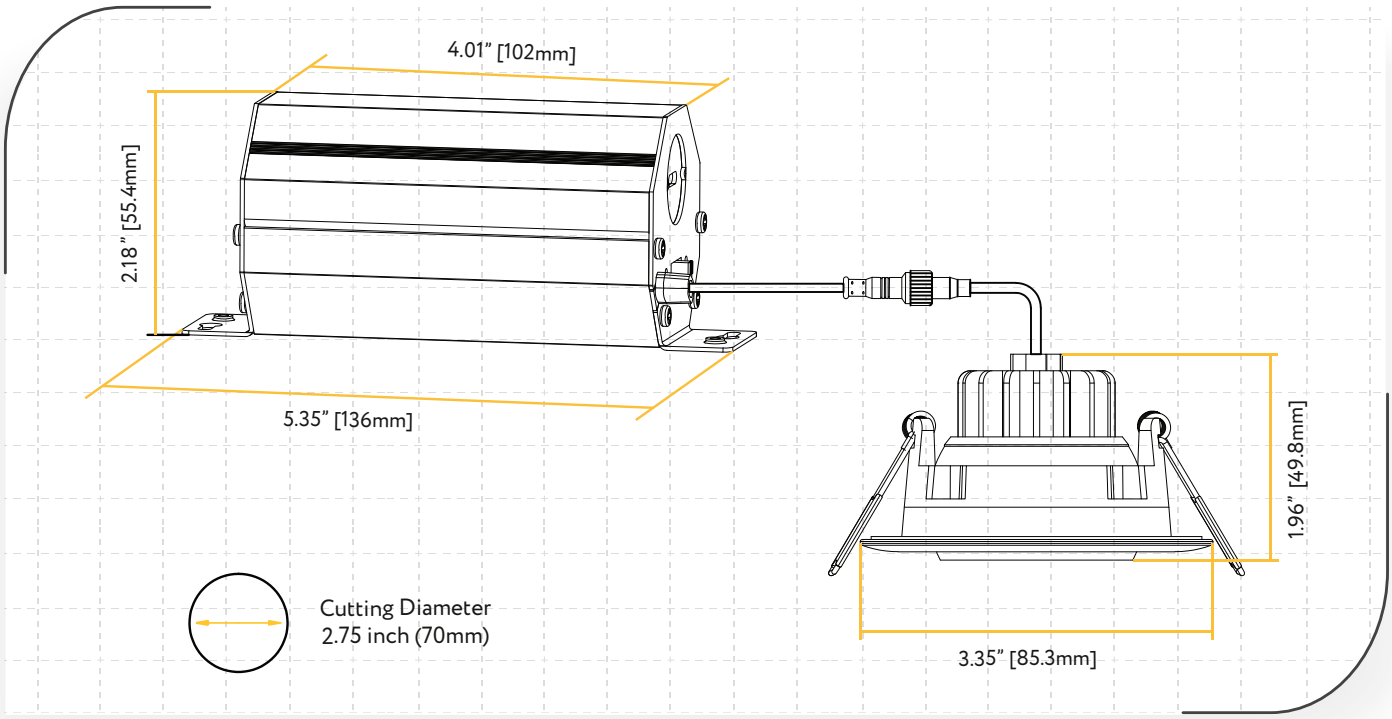

Dimmer list

BRAND	SERIES	MODEL	LOAD
LUTRON	SKYLARK CONTOUR	LECL-153P	150W
		CTCL-150H	150W
		LGCL-153PLH	150W
		CTCL-153P	150W
		SCL-153P	150W
		S-600P	600W
	CASETA	PD-6WCL	150W
		PD-5NE	150W
		PD-10NXD	250W
	DIVA	DVCL-153P	150W

BRAND	SERIES	MODEL	LOAD
LUTRON	TOGGLER	TGCL-153P	150W
	ARIADNI	AYCL-153P	150W
	MAESTRO	MACL-153M	600W
LEVITON	ILLUMATECH	IPL06	150W
	SURESLIDE	6672	150W
		6674	150W
EATON	SMART DIMMER	AAL06	300W
PASS & SEYMOUR	HARMONY	DCL453PTCCCV6	150W
GE	ROCKER	10464	150W
	TOGGLE	18027	150W

Accessories

Emergency LED Driver

15W G-48410 30W G-48411
25W G-95525 60W G-95521

120-277V Driver

G-48300 0-10 Diming

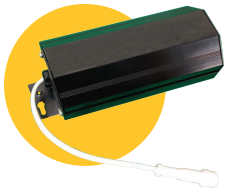

New Construction Plate

ITEM G-19981 (1 Punch Out)

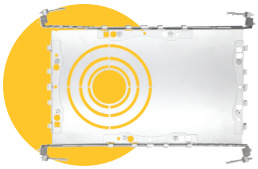

Extension Cords

G-20247 5ft G-20248 10ft

Multi Driver Converter

Use with G-95823 8W